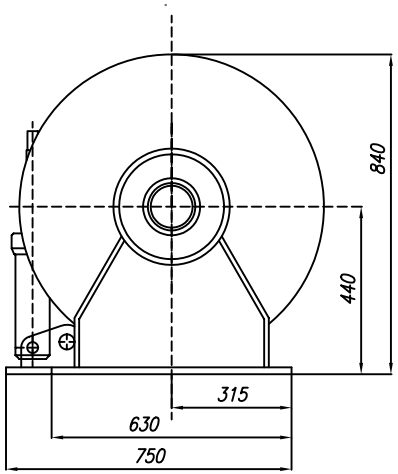

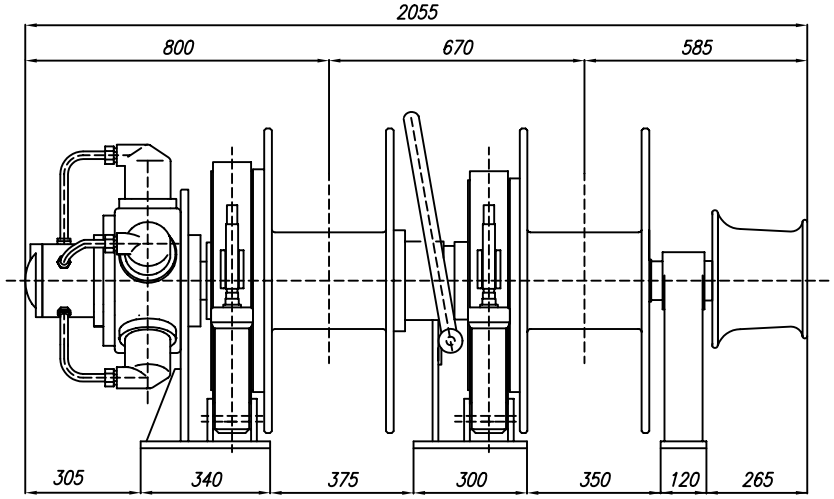

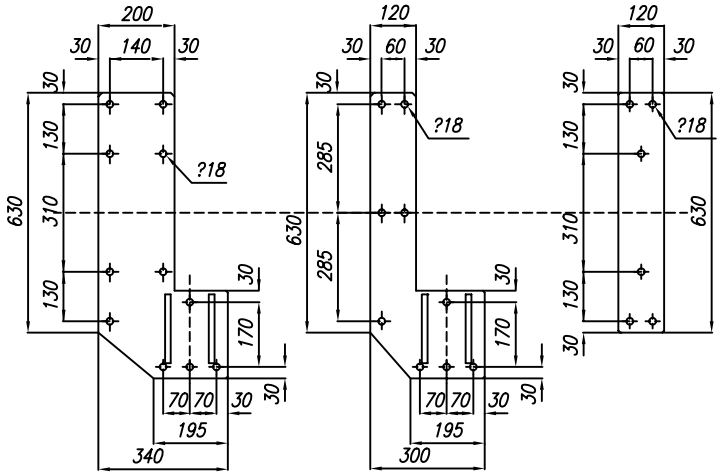

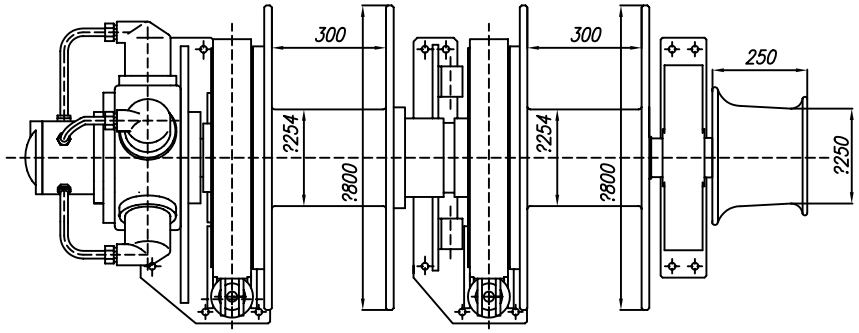

E			Tot.weight	RAPP HYDEMA	Phone: 75 55 01 00 Fax : 75 55 01 11 E-mail : office@rapphydema.com	Part list	
D							
C			Drawn SS	Date 29.03.93	Control / Approved	Subst.for:	Subst.by:
B			Scale 1:10	DIMENSION SKETCH		Drg.no. RH204290	
A				ANCHOR-MOORING WINCH AVW-580		Rev. ID. 0	Approved / Date
Rev.ID	Description of revision	Date/Sign.					