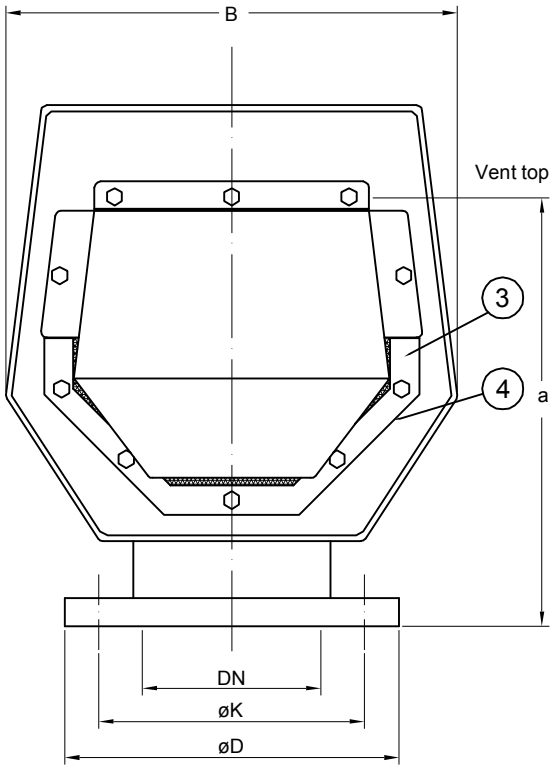

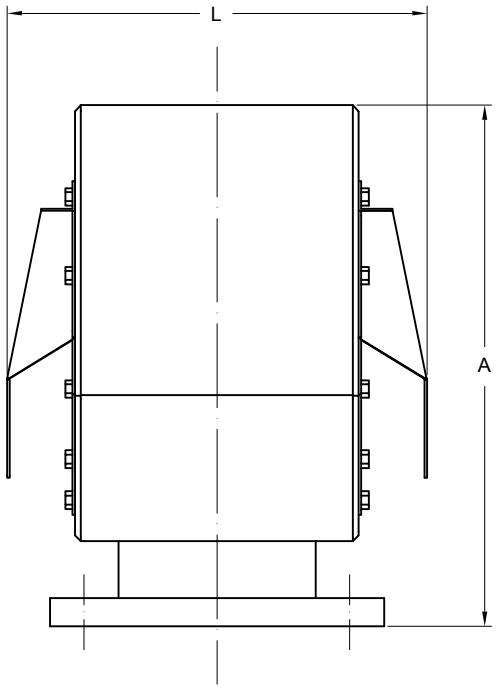

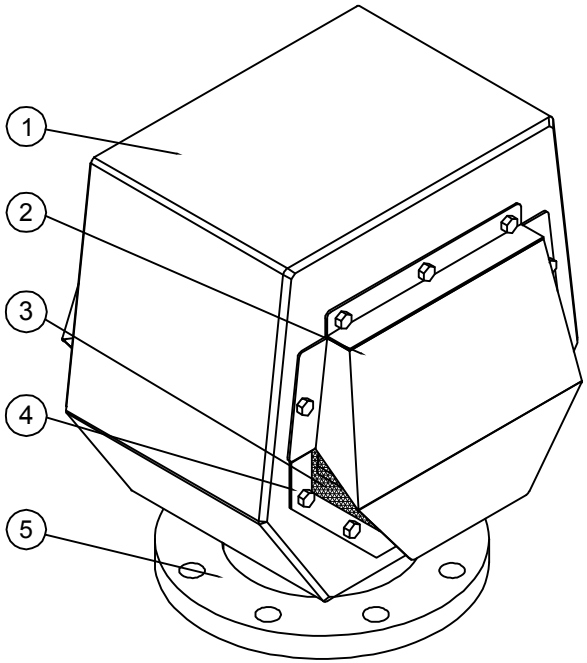

DN	L	B	A	a	øK	øD	Weight
40	223	213	263	222	110	150	13kg
50	223	213	263	222	125	165	14kg
65	223	213	263	222	145	180	15kg
80	257	270	310	255	160	200	20kg
100	257	270	310	255	180	220	21kg
125	304	302	335	280	210	250	28kg
150	366	385	448	356	240	285	41kg
175	411	430	477	392	270	315	53kg
200	461	470	517	425	295	340	63kg
250	536	590	660	530	350	395	97kg
300	681	685	731	585	400	445	121kg
350	766	885	887	700	460	505	175kg
400	766	885	887	700	515	565	205kg

All measurements in mm.

		Material	
Pos	Item	Spec. 1	Spec. 2
1	Body	Hot dip galv.	Aisi 316L
2	Cover	Hot dip galv.	Aisi 316L
3	*Screen	Aisi 316L	Aisi 316L
4	Screen clip	Aisi 316L	Aisi 316L
5	Flange	Hot dip galv.	Aisi 316L

*Option: flame, bug or rat screen

Option: different flange connections available

Approved by major classification societies.

This drawing/specification is the property of JOHN GJERDE AS and must neither be used, reproduced or handed over to a third party without our permission.

Revision | Revision

JOHN GJERDE™
www.gjerde.com

Scale		Date	Sign.
%	Drawn	02.02.10	MGS
	File	S-20542-12	
	Check	02.02.10	MGS
	Plot	02.02.10	MGS

Mar.Dir. | Class | Owner | Appr.

Title
AERO 1.1
Tank vent check valve
Flanged type – PN10

Draw. no.
S-20542-12